HEADROOM REQUIRED

OPENING HEIGHT	VERTICAL HEADROOM	HORIZONTAL HEADROOM
THRU 8'-0"	18"	17 ½"
OVER 8'-0" THRU 10'-0"	18 ½"	17 ¾"
OVER 10'-0" THRU 12'-0"	18 ¾"	18"
OVER 12'-0" THRU 14'-0"	19"	18 ½"

NOTES:

1. OPERATION TYPE MAY BE PUSH-UP OR RIGHT HAND INTERNAL ELECTRIC.
2. FOR CRITICAL FITS DUE TO REDUCED AVAILABLE HEADROOM OR SIDEROOM CLEARANCES, CONSULT FACTORY.
3. CLEARANCES SHOWN ARE MAXIMUMS. LESSER CLEARANCES MAY BE POSSIBLE.
4. UNLESS OTHERWISE NOTED, DOORS SHALL BE PROVIDED WITH SLIDE LOCKS AT EACH END OF BOTTOM BAR, ENGAGING GUIDES IN THE LOCKED POSITION (OPTIONAL CURTAIN MOUNTED MINI LATCH)
5. ALL OPENING PREPARATION, ELECTRICAL POWER AND FIELD PAINTING SHALL BE PROVIDED BY OTHERS.
6. SERIES 1000I IS AN INSULATED SERIES 1000.
7. CURTAIN FINISH SHALL BE SILICONE POLYESTER PRE-PAINT OVER GALVANIZED GRADE 80 STEEL.
8. GUIDES, BRACKETS, BOTTOM BAR ANGLE AND HEAD STOPS ARE ZINC COATED.
9. STANDARD OPERATION: PUSH-UP FOR OPENING SIZES THROUGH 10'-0" X 10'-0" HAND CHAIN FOR OPENING SIZES OVER 10'-0" X 10'-0".
10. MAXIMUM OPENING SIZE: 12'-0" X 14'-0"

BRACKET ATTACHMENT

CONCRETE/MASONRY: POWERS WEDGE-BOLT, ⅜ X 1 ¾" LONG
WOOD: LAG SCREW, ⅜ - 7 X 3" LONG
STEEL: ¼ - 14 x 1" TEKS

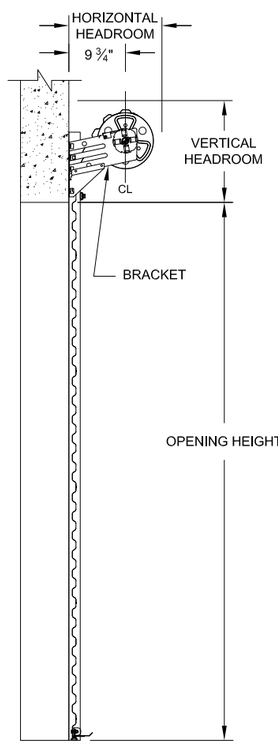

END VIEW

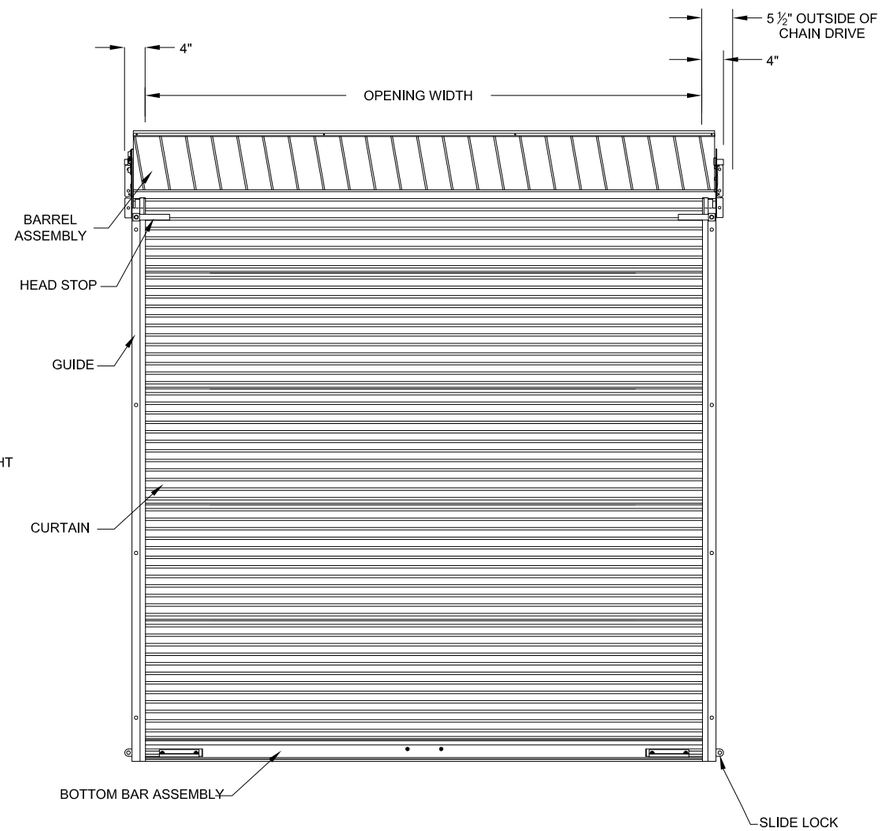

INSIDE ELEVATION

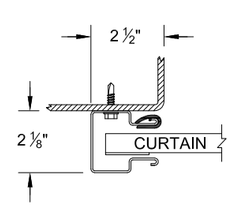

STEEL JAMBS
(USING ¼ - 14 X 1" TEKS)

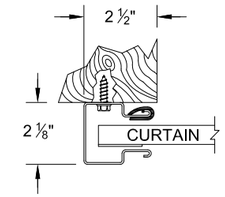

WOOD JAMBS
(USING ¼ - 10 X 1" LAG)

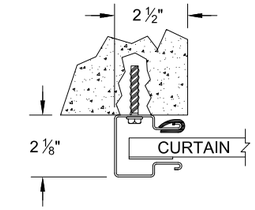

CONCRETE/MASONRY JAMBS
(USING ¼" X 1 ¾" POWERS WEDGE BOLT)

16 GA GUIDE MOUNTING DETAIL

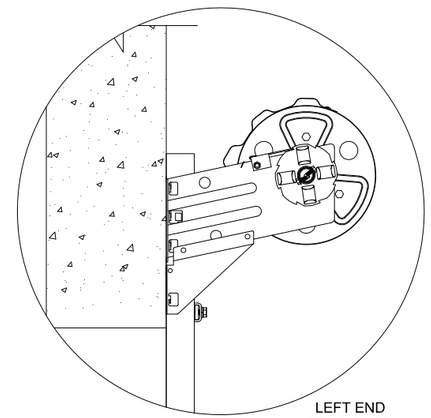

LEFT END
TENSIONER

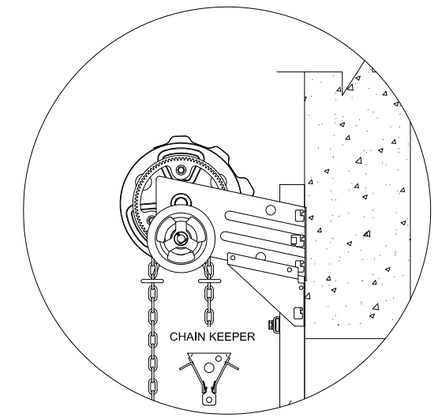

RIGHT END
HAND CHAIN OPERATION

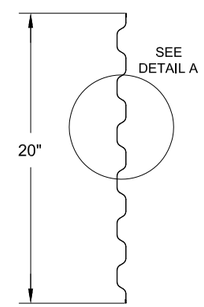

26 GA CURTAIN PANEL DETAIL

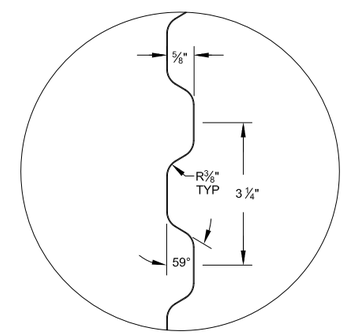

DETAIL A

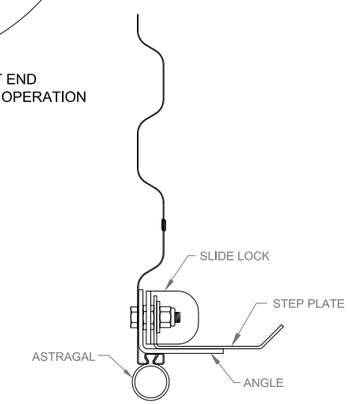

BOTTOM BAR ASSEMBLY

D.V. 08/13/2013

FACTORY ORDER NUMBER	DOOR SERIES		QTY	OPENING SIZE		JAMB TYPE			OUTSIDE CURTAIN COLOR	OPERATION			RH OPERATION ONLY	WEATHERSTRIP			ADDED OPTIONS
	1000	1000I		WIDTH	HEIGHT	STEEL	CONC./ MAS.	WOOD		PUSH UP	REDUCED CHAIN	INTERNAL ELECTRIC		TOP	HEADER	SIDE	

COMMERCIAL DOOR SERIES: 1000/1000I

CUSTOMER NUMBER:			DATE:
CUSTOMER NAME:			CONTACT:
PROJECT NAME:			
PROJECT LOCATION:			
PLANT:			SALESPERSON:
DRAWN BY:	DATE:		JANUS INTERNATIONAL GROUP, LLC. 135 JANUS INTERNATIONAL BLVD. TEMPLE, GA 30179-4435 770-562-2850 FAX: 770-562-2264
DRAWING NUMBER:	SHT:	OF:	