NOTES:

1. OPERATION TYPE MAY BE PUSH-UP, HAND CHAIN OR ELECTRIC.
2. FOR CRITICAL FITS DUE TO REDUCED AVAILABLE HEADROOM OR SIDEROOM CLEARANCES, CONSULT FACTORY.
3. CLEARANCES SHOWN ARE MAXIMUMS. LESSER CLEARANCES MAY BE POSSIBLE.
4. UNLESS OTHERWISE NOTED, DOORS SHALL BE PROVIDED WITH SLIDE LOCKS AT EACH END OF BOTTOM BAR, ENGAGING GUIDES IN THE LOCKED POSITION.
5. ALL OPENING PREPARATION, ELECTRICAL POWER AND FIELD PAINTING SHALL BE PROVIDED BY OTHERS.
6. SERIES 3400I IS AN INSULATED SERIES 3400.
7. CURTAIN FINISH SHALL BE SILICONE POLYESTER PRE-PAINT OVER GALVANIZED GRADE 80 STEEL.
8. GUIDES, BRACKETS, BOTTOM BAR ANGLE AND HEAD STOPS ARE ZINC COATED.
9. MAXIMUM OPENING SIZE: 12'-0" X 18'-0"
10. JANUS MODEL 3400 IS A MIAMI DADE COUNTY APPROVED WINDLOAD PRODUCT. PRODUCT EVALUATIONS AND STAMPED DRAWINGS ARE ACCESIBLE VIA. www.miamidade.gov.

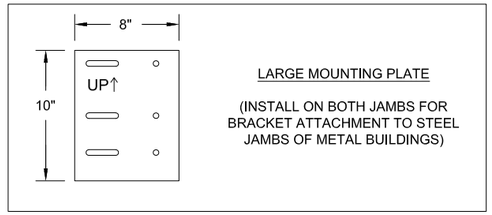

LARGE MOUNTING PLATE

(INSTALL ON BOTH JAMBS FOR BRACKET ATTACHMENT TO STEEL JAMBS OF METAL BUILDINGS)

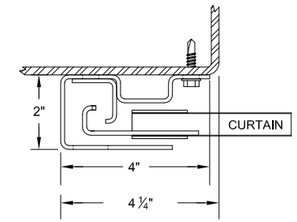

STEEL JAMBS
USING 1/4-14 X 1" SELF-DRILLING SCREW

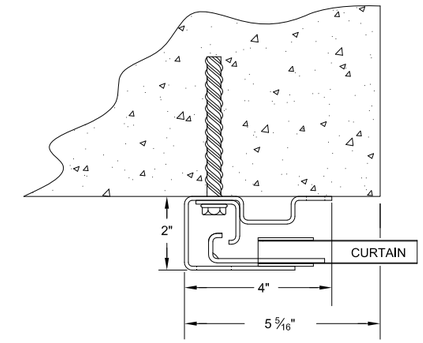

CONCRETE/FILLED BLOCK JAMBS
USING ⅜" X 4" POWERS WEDGE BOLT

BRACKET ATTACHMENT
CONCRETE/FILLED BLOCK: POWERS WEDGE-BOLT, ⅜" X 1 ¾"
STEEL: HEX BOLT, GR.5, ⅜ - 16 X 1 ¼" LONG

(*)(*) DIMENSIONS SHOWN ARE FOR MOUNTING TO STEEL JAMBS.
ADD 1 1/16" WHEN ATTACHING TO CONCRETE OR FILLED BLOCK JAMBS.

(*) FOR PUSH-UP OPERATION.....6"
FOR HAND CHAIN OPERATION.....7"
FOR ELECTRIC OPERATION.....7 ½"
FOR OUTSIDE OF CHAIN DRIVE.....8 ½"
NOTE: RIGHT SIDE DRIVE SHOWN

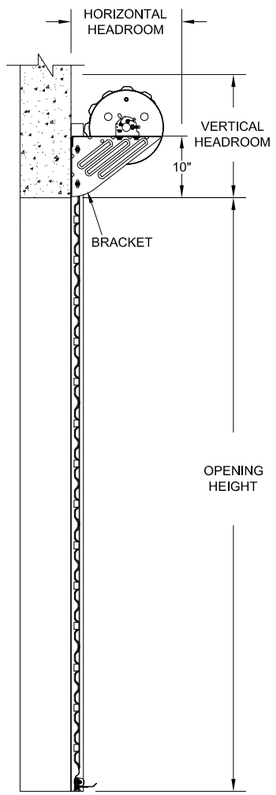

END VIEW

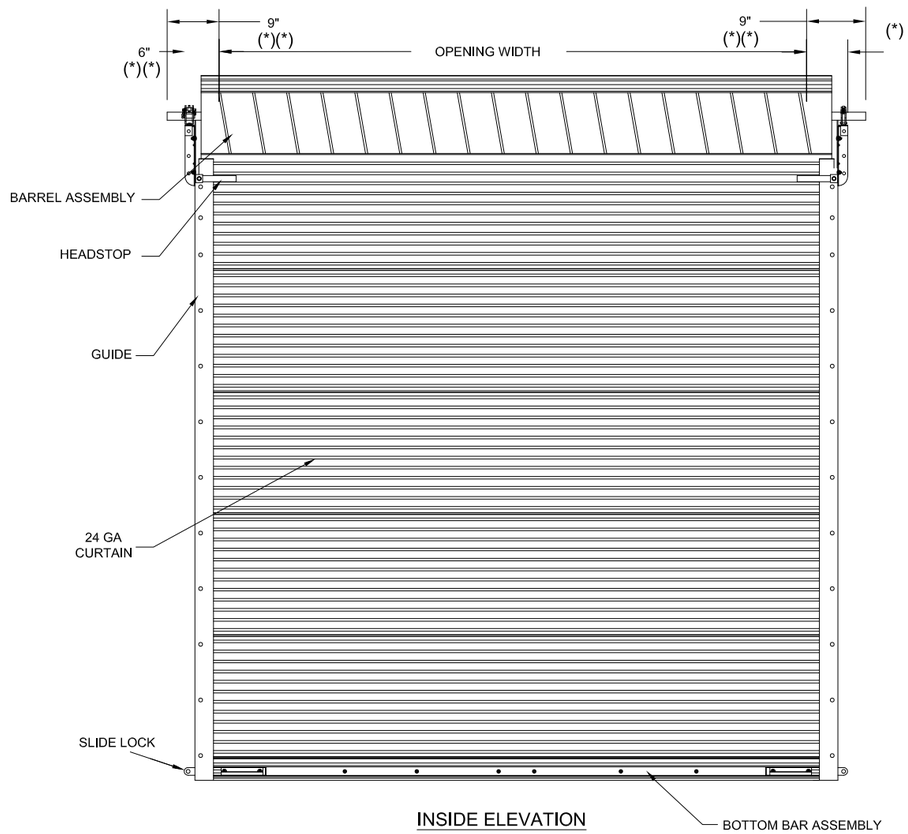

INSIDE ELEVATION

HEADROOM REQUIRED

OPENING HEIGHT	VERTICAL HEADROOM	HORIZONTAL HEADROOM
THRU 8'-0"	20"	20"
OVER 8'-0" THRU 10'-0"	21"	21"
OVER 10'-0" THRU 14'-0"	21 ½"	21"
OVER 14'-0" THRU 16'-0"	22"	21"
OVER 16'-0" THRU 18'-0"	22"	22"
OVER 18'-0" THRU 20'-0"	22"	22"

12 GA GUIDE MOUNTING DETAIL

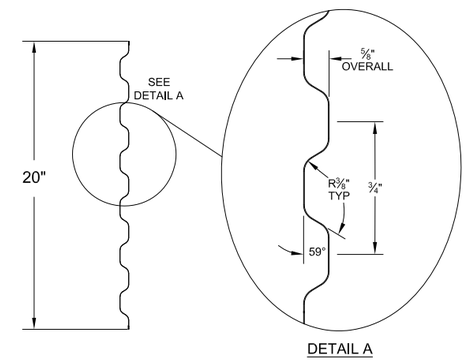

DETAIL A

24 GA CURTAIN PANEL DETAIL

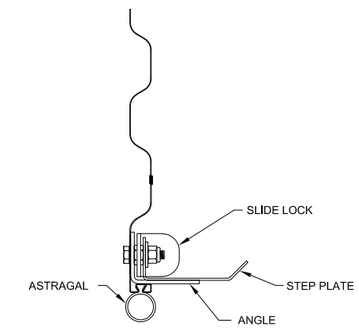

BOTTOM BAR ASSEMBLY

FACTORY ORDER NUMBER	DOOR SERIES		QTY	OPENING SIZE		JAMB TYPE			OUTSIDE CURTAIN COLOR	OPERATION			OPERATION HAND	WEATHERSTRIP			ADDED OPTIONS
	3400	3400I		WIDTH	HEIGHT	STEEL	CONC./ MAS	WOOD		PUSH UP	REDUCED CHAIN	ELECTRIC		TOP	HEADER	SIDE	

814010-0000

A.K. 12/04/2023

COMMERCIAL DOOR SERIES: 3400/3400I

CUSTOMER NUMBER:			DATE:
CUSTOMER NAME:			CONTACT:
PROJECT NAME:			
PROJECT LOCATION:			
PLANT:			SALESPERSON:
DRAWN BY:	DATE:		JANUS INTERNATIONAL GROUP, LLC. 135 JANUS INTERNATIONAL BLVD. TEMPLE, GA 30179-4435 770-562-2850 FAX: 770-562-2264
DRAWING NUMBER:	SHT:	OF:	