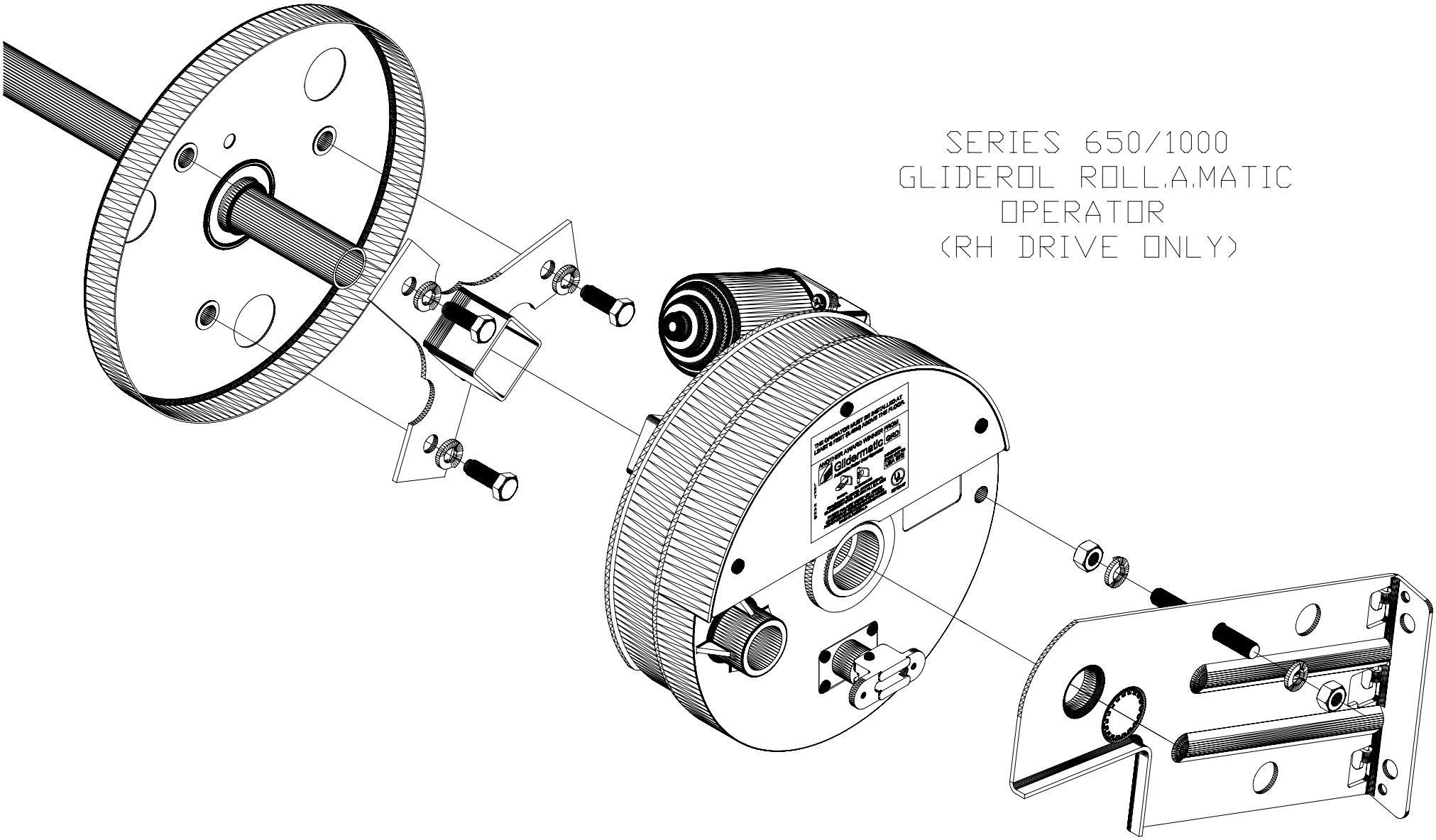
SERIES 650/1000
GLIDEROL ROLL.A.MATIC
OPERATOR
(RH DRIVE ONLY)
Glidermatic